Distributed by:

JAMECO® ELECTRONICS

www.Jameco.com ✦ 1-800-831-4242

The content and copyrights of the attached material are the property of its owner.

FP-108AX

80x80x25.4mm(3.15x3.15x1.0 inch) ***GAMMA***

DESIGN FEATURES

BEARING SYSTEM:	**SLEEVE BEARING & BALL BEARING**
WEIGHT:	**230(g)**
IMPELLER:	**PLASTIC WITH FIBER GLASS FILLED UL 94V-0**
HOUSIGN:	**DIE CAST ALUMINUM & ZINC**
MOTOR:	**SHADED POLE, IMPEDANCE PROTECTED**
CONNECTING:	**WIRE LEADS**
SPEED:	**S-1 HIGH SPEED TYPE** **S-2 MEDIUM SPEED TYPE**
OTHER VOLTAGE:	**24, 48, 100, 380AC (50/60Hz) ARE AVAILABLE**

FP-108-AX							SPECIFICATIONS		
Model No.	Volt	Frequency	Air	Volume	Current	Power	Speed	Static pressure	Noise
	(VAC)	(Hz)	(CFM)	(M^3/Min)	(A)	(W)	(RPM)	(Inch-H2O)	(dBA)
FP-108-AX	110/120	50/60	21/23	0.60/0.67	0.19/0.17	13/14	2400/2800	0.18/0.21	29/33
(S-1)									
FP-108-AX	220/240	50/60	21/23	0.60/0.67	0.12/0.10	13/14	2400/2800	0.18/0.21	29/33
(S-1)									
FP-108-AX	110/120	50/60	17/18	0.48/0.51	0.11/0.10	11/10	2100/2500	0.13/0.14	25/29
(S-2)									
FP-108-AX	220/240	50/60	17/18	0.48/0.51	0.09/0.08	11/10	2100/2500	0.13/0.14	25/29
(S-2)									

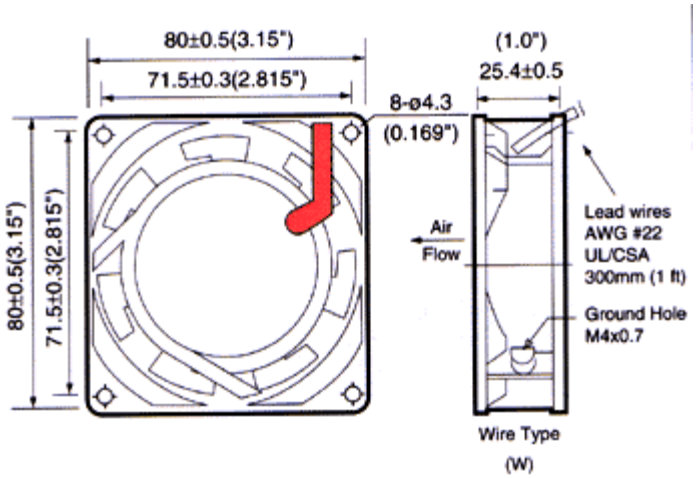
80±0.5(3.15")
71.5±0.3(2.815")
8-ø4.3
(0.169")
(1.0")
25.4±0.5
80±0.5(3.15")
71.5±0.3(2.815")
Air
Flow
Lead wires
AWG #22
UL/CSA
300mm (1 ft)
Ground Hole
M4x0.7
Wire Type
(W)

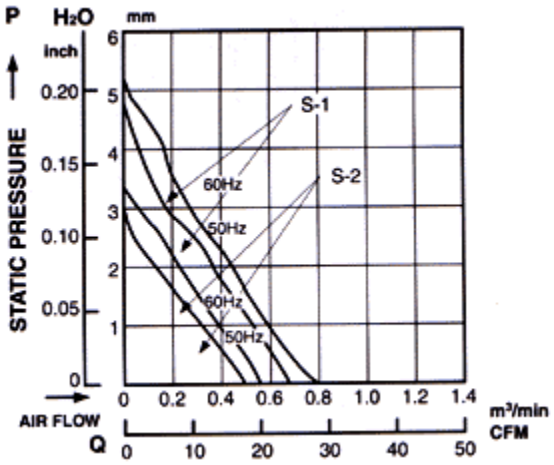
P
H2O
mm
inch
STATIC PRESSURE
0.20
0.15
0.10
0.05
0
6
5
4
3
2
1
S-1
S-2
60Hz
50Hz
60Hz
50Hz
0
0.2
0.4
0.6
0.8
1.0
1.2
1.4
m³/min
AIR FLOW
Q
CFM
0
10
20
30
40
50