DWG NO 191172-001 REV. 1

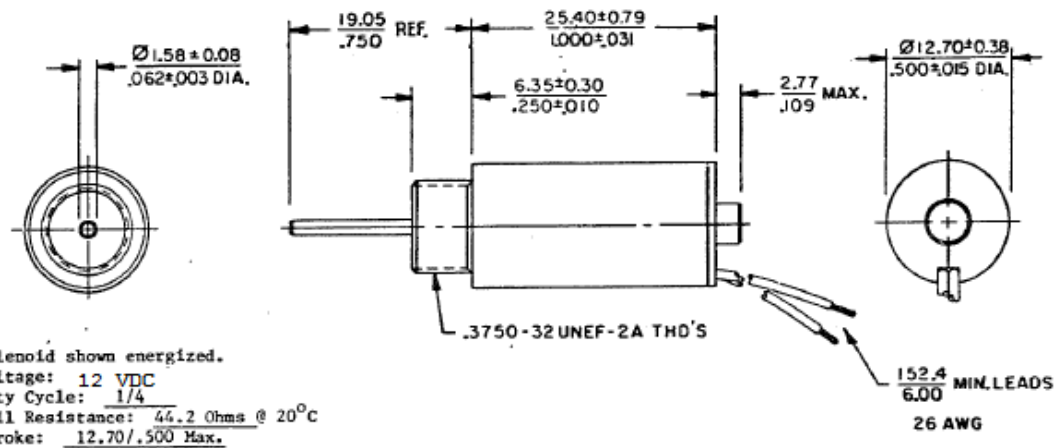

NOTES:

1. Solenoid shown energized.
2. Voltage: 12 VDC
3. Duty Cycle: 1/4
4. Coil Resistance: 44.2 Ohms @ 20°C
5. Stroke: 12.70/.500 Max.
6. Dielectric Strength: 500 VRMS.
7. Plunger: Free-Floating- Push Type
8. Identification: Ledex Inc. & Part No.
9. Acceptance Test: Solenoid shall develop
   1.95N/7.0 ozNet Force at
   2.54/.100 Inches Stroke with
   .61 amps (sim. 27.0 VDC @ 20°C)
10. △

NEXT ASSY FIRST USED	UNLESS OTHERWISE SPECIFIED ALL DIMENSIONS IN MM/INCHES METRIC DECIMAL	1	REMOVE MTG. NUT	11-29-84
FINAL ASSY FIRST USED		REV NO.	REVISION	BY / DATE
D.B. NO .500 DIA (PUSH)	STRAIGHTNESS AND/OR FLATNESS .12 MM/.25 MM, .005 IN/1 INCH. ANGLES ± ~	TITLE TUBULAR SOLENOID		
MODEL NO.	DRAFT LOPEZ 11-12-84 / CHECKER DATE 11-14-84 / ENGINEER DATE 11-14-84	CODE IDENT 81840	DWG NO 191172-001	REV 1
LEDEX	THIS DRAWING AND INFORMATION THEREON IS THE PROPERTY OF LEDEX INC SOH USA AND ALL UNAUTHORIZED USE AND REPRODUCTION IS PROHIBITED.	☒ KENDALIA ☐ PIONA ☐ WILMINGTON	SCALE	SHEET 1 OF 1