REV.	DATE	DESCRIPTION
A	01/20/04	UPDATE DRAWING FORMAT

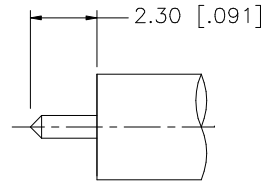

RECOMMENDED CABLE
STRIPPING DIMENSIONS

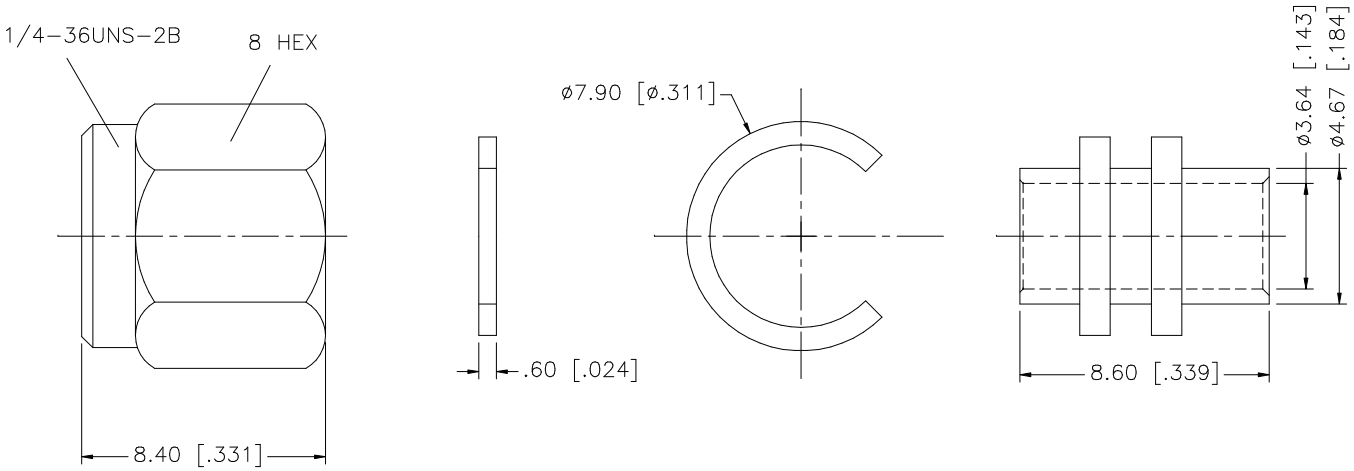

	DESCRIPTION	MATERIAL	FINISH	QTY
8				
7				
6				
5				
4	RETAINER RING	BER. COPPER	NATURAL	1
3	GASKET	SILICONE	RED	1
2	BODY	BRASS	GOLD	1
1	HOUSING	BRASS	GOLD	1

UNLESS OTHERWISE SPECIFIED DIMENSIONS ARE IN MILLIMETERS. DIMENSIONS IN [ ] ARE IN INCHES AND FOR CUSTOMER REFERANCE ONLY.

UNLESS OTHERWISE SPECIFIED TOLERANCES FOR MILLIMETERS ARE:
0.5 – 8mm ± 0.20mm
8 – 30mm ± 0.40mm
30 – 120mm ± 0.50mm

UNLESS OTHERWISE SPECIFIED TOLERANCES FOR INCHES ARE:
.020 – .315 = ± 0.007"
.315 – 1.180 = ± 0.015"
1.180 – 4.724 = ± 0.020"

DO NOT SCALE DRAWING

APPROVALS		DATE
DRAWN	G.R.S.	01/20/04
CHECKED		
ISSUED		
SHEET	1 OF 1	
CAD FILE	C:/132/132100.DWG	

Amphenol Connex

PART DESCRIPTION
SMA DIRECT SOLDER PLUG
(.141 SEMI-RIGID CABLE)

PART NO. 132100

DWG. NO. 132100 | REV. A | SIZE A | SCALE NA