33, 34

- Snap fits into .375" x 1.28" panel cutout
- Incandescent and neon illumination
- Many lens styles available
- Dummy (hole plugs) available

SPECIFICATIONS

Body Material:	Nylon	Wire Strip	1/2"
Lens Material:	Polycarbonate	Panel Thickness:	0.030" to 0.100"
Wire Gauge:	18 ga.	Certifications:	See Page 1

33

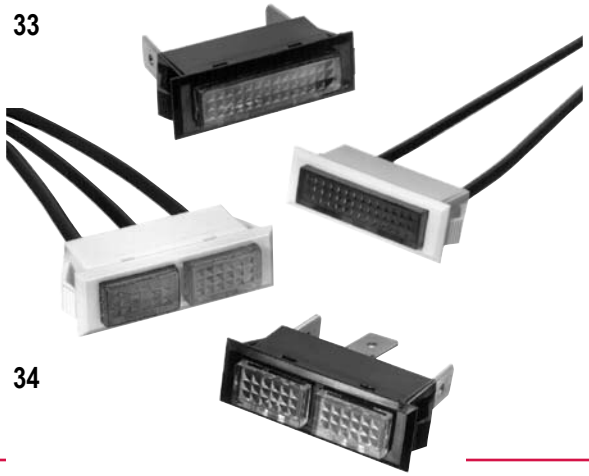

34

33

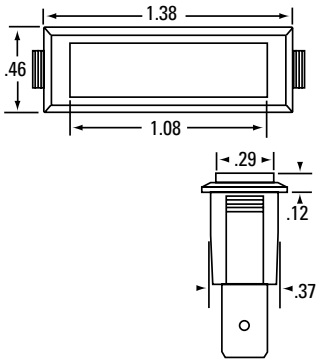

34

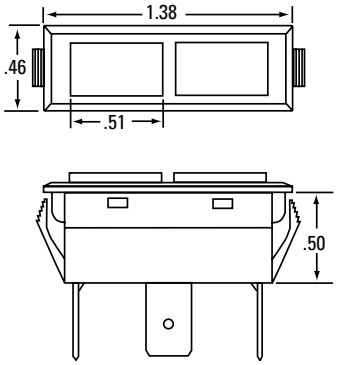

Series | **Lamp** | **Termination** | **Base** | **Bezel** | **Lens**

XX XX – X – X X – XXX X X

Series	Voltage	Type	Code
33	N/A	DUMMY	00
34	6	INCAND	32
	14	INCAND	35
	28	INCAND	39
	125	NEON	50
	250	NEON	52
		Special	XX

Style	Code
N/A	0
6" Wire	1
.187 Tabs	3
.250 Tabs	4
Special	X

Color	Code
Matte White	4
Matte Black	5

Finish	Code
None	0
Stainless	1

Style	Code
33 Series Lenses	
Rectangular Translucent	181
Rectangular Plain	182
Rectangular Diamond	183
Rectangular Frost	184
Rectangular Lines	185
34 Series Lenses	
Rectangular Translucent	191
Rectangular Diamond	193
Rectangular Frost	194
Rectangular Lines	195

Color	Plain
Red	1
Amber	2
Clear	3
Green	4
Blue	5
White	6
Black	7

Color	Marked
Red	A
Amber	B
Clear	C
Green	D
Blue	E
White	F

Series	Code
33	0
34	Repeat selection from lens color choices above

White is Translucent
Clear is Transparent

ADDITIONAL OPTIONS AVAILABLE:

Contact Factory